SYSTEM 1300 ROLLING STOCK

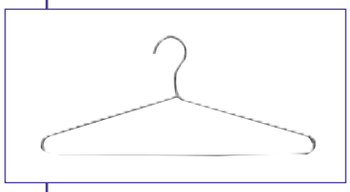

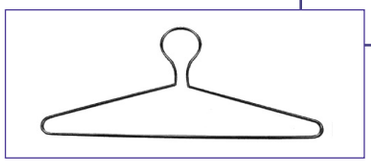

The Railex System 1300

is an extensive line of Rolling Stock developed specifically for garment handling applications. It is made to withstand use in Industrial and Institutional Service, Uniform Rental, Department Stores, Manufacturing,Warehousing and Distribution.

RAILEX Corporation

89-02 Atlantic Ave., Ozone Park, NY 11416 ◆ Tel: (718) 845-5454 ◆ Fax: (718) 738-1020

WWW.RAILEXCORP.COM ◆ EMAIL: RAILEX@RAILEXCORP.COM

SYSTEM 1300 Garment Racks
Medium Duty Series 1307-1317

Railex 1307, 1308 & 1317 Series are Designed as a Low Cost Rack Suitable for Light to Medium Duty Applications.

Model 1307

Model 1317

FEATURES:

- Light weight.
- Simple assembly & disassembly.
- Adjustable rail height.
- Centered lower beam allowing clear work area.
- Nest to 1 1/2" x 2" space.

SPECIFICATIONS:

Base: Round steel tubing, 1 5/16" diameter x 14 gauge, provided with end caps.

Uprights & Hanger Bar:
Steel tubing, 1 1/16" diameter x 14 gauge bright zinc plated.

Casters: Ball bearing swivel, 3" diameter.

Overall Height: 64" **Width:** 20"

CAT. NO.	DESCRIPTION	LENGTH	HEIGHT BETWEEN BARS	SHIPPING WEIGHT
1307-36P	1 Tier	36"	55"	23
1307-48P	1 Tier	48"	55"	25
1307-60P	1 Tier	60"	55"	27
1308-36P	2 Tier	36"	27"	27
1308-48P	2 Tier	48"	27"	30
1308-60P	2 Tier	60"	27"	33
1317-36P	1 Tier w/Shelf	36"	55"	28
1317-48P	1 Tier w/Shelf	48"	55"	31
1317-60P	1 Tier w/Shelf	60"	55"	34

SYSTEM 1300 Garment Rack, Heavy Duty Series 1331-1332

Railex 1331 & 1332 Series combine rugged construction and attractive design for use in Contemporary Commercial and Institutional Establishments, Warehouses, Distribution Centers and Department Stores.

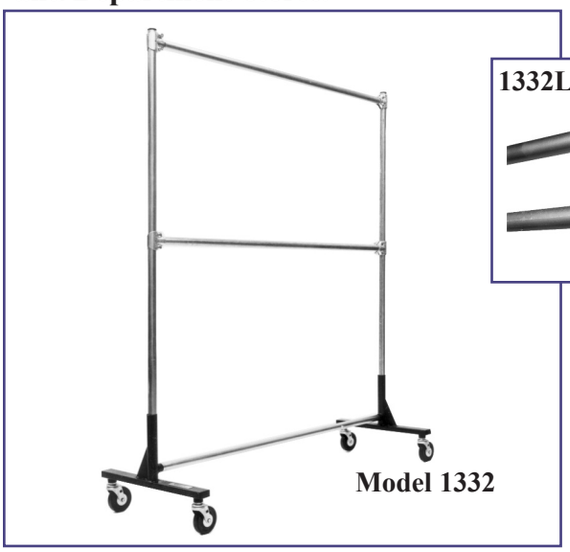

FEATURES:

- Heavy duty construction.
- Distinctive, graceful design.
- Thread guard casters to prevent accumulation of threads, lint and dirt.
- Simple assembly & disassembly.
- Adjustable rail height.
- Centered lower beam allowing clear work area.
- Fully nesting.

SPECIFICATIONS:

Base: Rectangular steel tubing 2” x 1” x 14 gauge, provided with end caps and reinforced with 1/4” thick gussets.

Uprights & Hanger Bar: Steel tubing, 15/16” diameter x 14 gauge, bright zinc plated.

Casters: ball bearing swivel, 4” cushion tread wheels, thread guard axles.

Optional:

- Chrome plated uprights & hang bar, add suffix C.
- Steering handle, add suffix A.
- 5” Rubber or urethane casters.
- Corner bumpers.

Cat No.	Description	Width	Length	Overall Height	Height Between Bars	Weight
1331-36	1 Tier	20”	36”	72”	62”	30
1331-48	1 Tier	20”	48”	72”	62”	32
1331-60	1 Tier	20”	60”	72”	62”	34
1331-72	1 Tier	20”	72”	72”	62”	36
1332-36	2 Tier	20”	36”	78”	31”	33
1332-48	2 Tier	20”	48”	78”	31”	36
1332-60	2 Tier	20”	60”	78”	31”	38
1332-72	2 Tier	20”	72”	78”	31”	43
1332-48L	1 or 2 Tier Combined	20”	48”	78”	31” - 60”	37
1332-60L		20”	60”	78”	31” - 60”	40
1332-72L		20”	72”	78”	31” - 60”	52

UPS Shippable

SYSTEM 1300 Coat and Hat Rack Series 1331Q

Railex 1331Q Series combine rugged construction and attractive design for use in Catering, Rental, Offices and Restaurants. They are assembled and dismantled quickly without tools for Relocating, Shipping or Summer Storage.

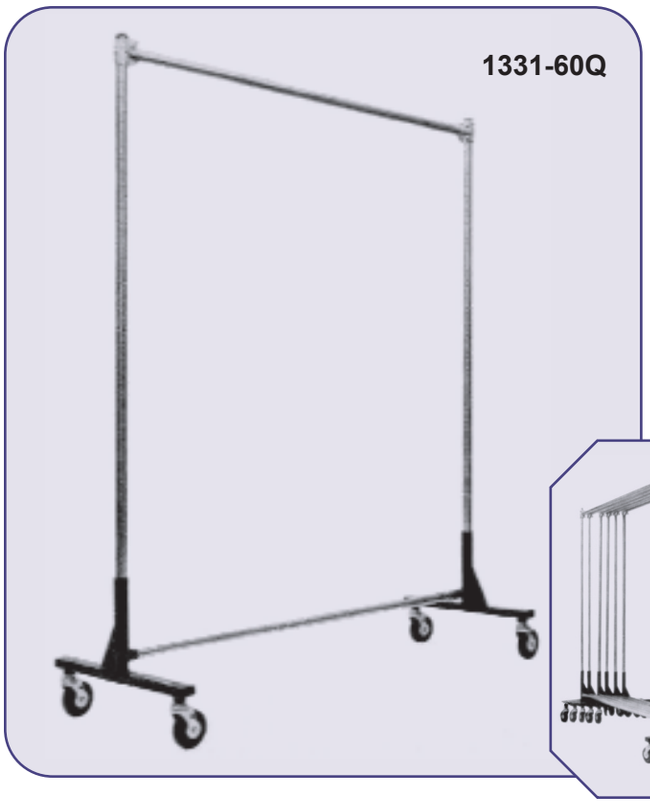

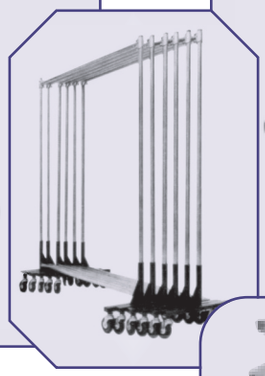

HANGERS
Chrome Plated Steel, Heavy Duty

1201-8SO
Open Neck

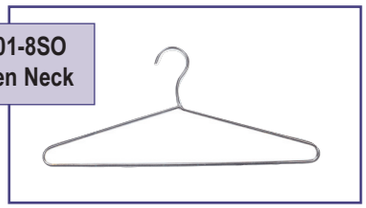

1201-9SC
Closed Neck

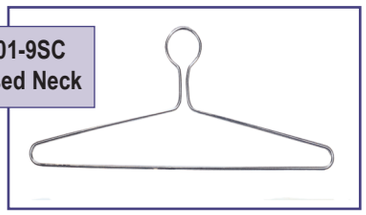

CAT. NO.	DESCRIPTION	Lgth	Plating	Shipping Wght lbs.
1331-60Q	Coat Rack, Quick Assembly	60”	Zinc	34 lbs.
1331-60CQ	Coat Rack, Quick Assembly	60”	Chrome	34 lbs.
1331-60QS	Coat & Hat Rack, Quick Assembly	60”	Zinc	35 lbs.
1331-60CQS	Coat & Hat Rack, Quick Assembly	60”	Chrome	35 lbs.
1201-8SO	Hanger, Steel, Chrome, Open	~	Chrome	.3 lbs.
1201-9SC	Hanger, Steel, Chrome, Closed	~	Chrome	.3 lbs.

UPS Shippable

* Plating refers to finish of uprights, hanger bar and shelf.
Bright Zinc or Chrome Plated

Optional: Corner Bumpers.

SYSTEM 1300 Garment & Merchandise Racks, Heavy Duty Series 1333-1336

Railex series 1333-1336 are designed for extra heavy duty service in Stock Rooms, Receiving, Shipping and Transporting Operations in Garment Manufacturing, Distribution, and Department Stores. Package shelf models are ideal for simultaneous transporting of boxed goods and other general merchandise.

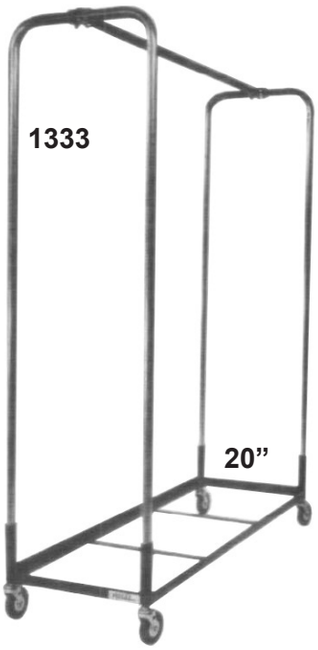

FEATURES:

- Extra heavy duty construction.
- Thread guard casters to prevent accumulation of threads, lint and dirt.
- Single or double.
- Can be shipped disassembled.

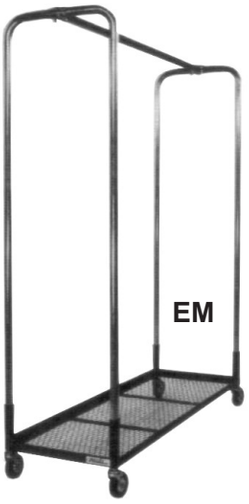

SPECIFICATIONS:

Base: 1 1/2” x 1 1/2” x 1/8”

Uprights and Hanger Bar: Tubing 1 5/16” x 14 ga. bright zinc plated steel.

Casters: Ball bearing swivel, 4” cushion tread wheels, thread guard axles.

Finish: All tubing, clamps, casters and fasteners are bright zinc plated. Bases are painted.

OPTIONAL:

- Solid Metal Deck ~ Add suffix SM.
- Expanded Metal Deck ~ Add suffix EM.
- Double Tier ~ Catalog No. 1336.
- Special Casters 5”.
- Corner bumpers.

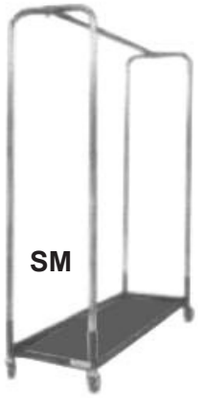

Cat. No.	Length	Width	Height Between Bars	Shipping Weight
1333-48	48”	20”	62”	40 lbs.
1333-60	60”	20”	62”	43 lbs.
1333-72	72”	20”	62”	46 lbs.
1335-48	48”	28’	59”	46 lbs.
1335-60	60”	28”	59”	65 lbs.
1335-72	72”	28”	59”	87 lbs.

SYSTEM 1300 Empty Jolley Transporter Series 1363

For Storage and Transport of Empty Jolleys.

FEATURES:

- Heavy duty welded construction.
- Broad base. Will not tip over when fully loaded.
- Rolls easily in all directions.
- Will accommodate Jolleys to 42”.
- Shipped completely assembled and ready for use.

SPECIFICATIONS:

Construction: 1 5/16" 14 ga. zinc plated steel tubing.
Casters: Ball bearing swivel, 4” cushion tread wheels, thread guard axles.

OPTIONAL:

- Special Sizes
- 5” Casters, rubber or urethane.

Model No.	Floor Space	Hanging Bar Height	Shipping Weight
1363	48” x 24”	56” - 60”	45 lbs.

SYSTEM 1300 Empty Trolley Transporter Series 1364

For Storage and Transport of Empty Trolleys. Will hold 40 - 60 Trolleys

FEATURES:

- Heavy duty welded construction.
- Broad base. Will not tip over when fully loaded.
- Rolls easily in all directions.
- Will accommodate Trolleys 30”- 44”
- Shipped completely assembled and ready for use.
- Stacking for shipment or storage.

SPECIFICATIONS:

Construction: 1 5/16" 14 ga. zinc plated steel tubing.
Casters: Ball bearing swivel, 4” cushion tread wheels, thread guard axles.

OPTIONAL:

- Special Sizes
- 5” Casters rubber or urethane

Model No.	Floor Space	Hanging Bar Height	Shipping Weight
1364	48” x 24”	48”	45 lbs.

System 1300 Casters Series 1301-C

STEM

Catalog Number	Mounting Type	Wheel	Axle	Axle Bearing	Load Rating Each Caster Lbs.	Used on Railex Systems
13C3B	3/8" x 1 1/2"	3" x 3/4" Cushion Tread Rubber	1/4"	Oiless	90 lbs.	1307, 1317
13C4BG125	7/16" x 1 1/2"(d) (g)	4" x 1" Cushion Tread Rubber	5/16"	Oiless	125 lbs.	1331-1332 1340, 1365
13C5BG125	7/16" x 1 1/2" (g)	5" x 1" Cushion Tread Rubber	5/16"	Oiless	125 lbs.	*Optional on Above*
13C5BG200	1/2" x 1 1/2"(d) (g)	5" x 1 1/4" Cushion Tread Rubber	3/8"	Ball Bearing	250 lbs.	*Optional on Above*

PIPE

13C4IG	3/4" I.P.S. (d) (g) Pipe	4" x 1" Cushion Tread Rubber	5/16"	Oiless	125 lbs.	1333, 1336, 1341, 1364, 1366, 1367
13C5IGOL	3/4" I.P.S. (d) (g) Pipe	5" x 1" Cushion Tread Rubber	5/16"	Oiless	125 lbs.	*Optional on Above*
13C5IGBB	3/4" I.P.S. (d) (g) Pipe	5" x 1 1/8" Cushion Tread Rubber	3/8"	Ball	200 lbs.	*Optional on Above*

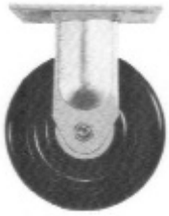

RIGID PLATE

13C6RP-RO	Rigid Plate (e)	6" x 2" Phenolic	1/2"	Roller	600 lbs.	1337, 1338 1351-1353

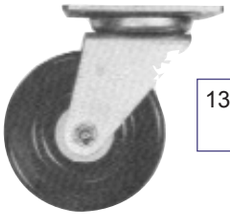

SWIVEL PLATE

13C6SP-RO	Swivel Plate (e)	6" x 2" Phenolic	1/2"	Roller	600 lbs.	1337, 1338 1351-1353

RUBBER BUMPER

13B5-150	Rubber Corner	5" x 1 1/2"	Requires 4 per rack	*Optional on:* 1333, 1335, 1337-1353 1364, 1366, 1367
13B5-71	Rubber Corner	5" x 7/16"	Requires 4 per rack	1331, 1332, 1340, 1365

(d) Double Ball Bearing (e) Grease Fitting (g) Threadguard Axle

OTHER SYSTEMS *By Railex*

Continuous Speed Rail & Trolley System	200
Inclined Trolley Booster	211
Rotating Rail Conveyor	321
Continuous Tube Conveyor	430
Vertical Garment Conveyors	500
Storage & Retrieval Conveyors	700-900
Checkroom Systems (Electric)	1000-1100
Checkroom Systems (Stationary)	1200
Rolling Stock	1300
Electronic Control Systems	1800
Dispatchermatic & Sorting	3000

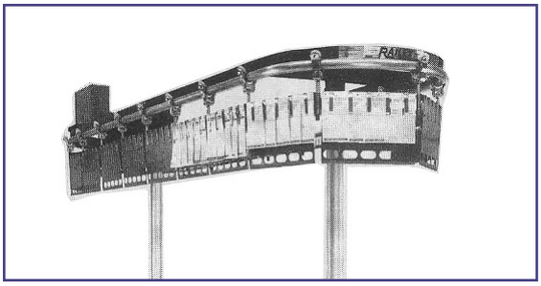

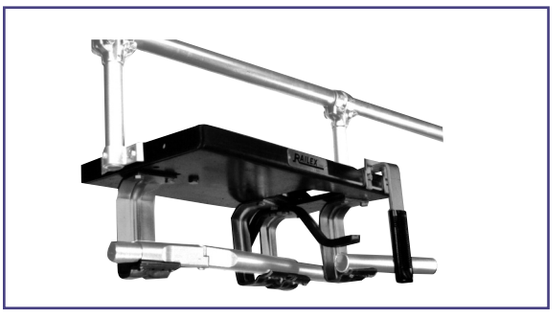

RAILEX Corp.

89-02 Atlantic Avenue, Ozone Park, NY 11416
Tel: (718) 845-5454 ◆ Fax: (718) 738-1020
www.railexcorp.com ~ railex@railexcorp.com